# REVOLVING CENTER

## FEATURES:

- Three bearings construction Life long lubricated with special grease isoflex NBU15
- Main body & sleeve hardened & ground.
- Operator friendly design for dismantling & assembling. The user can change the bearings after long use or wear within few hours, all details are shown in schematric drawing.
- Being standard MT2 & MT3 internal tapers in MT4 & MT5 revolving centers respectively, easy to replace centers of standard angle to, 30 degrees angle to pipe center. OR....
- Maximum permissible R.P.M
  For MT4 revolving center: 4000 RPM
  For MT5 revolving center: 3000 RPM
- Accuracy :On master mandrel within 0.010 MM MAX.

# REVOLVING CENTER

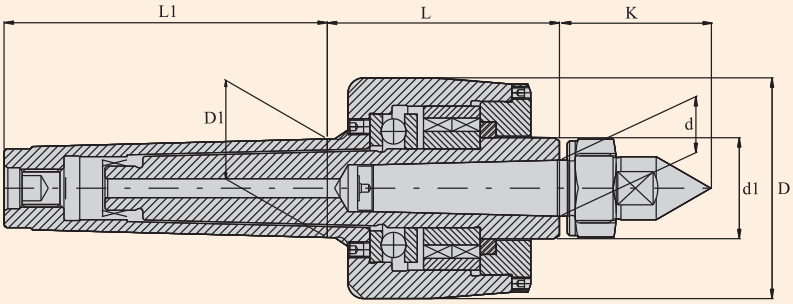


Balanced to G 6.3 - 15,000 RPM.

| ITEM NAME | D | D1 | d | d1 | L | L1 | K |
|---|---|---|---|---|---|---|---|
| MT4 REVOLVING CENTER WITH INTERNAL MT2 TAPER | 70.00 | 31.267 | MT2 INTERNAL 17.78 | 32.00 | 73.50 | 102.50 | 48.00 |
| MT5 REVOLVING CENTER WITH INTERNAL MT3 TAPER | 87.50 | 44.399 | MT3 INTERNAL 23.825 | 40.00 | 94.00 | 129.50 | 57.00 |

## *CENTER*

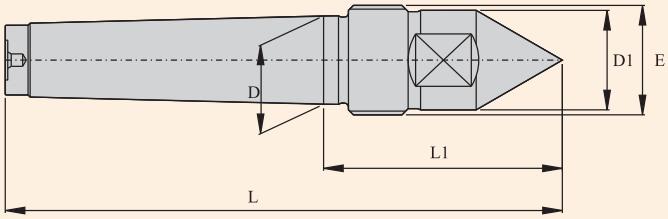


## *EXTRACTOR NUT*

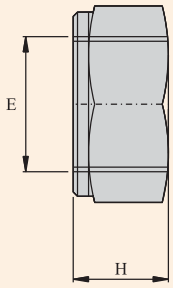


Balanced to G 6.3 - 15,000 RPM.

| ITEM NAME. | D | D1 | L | L1 | H | E |
|---|---|---|---|---|---|---|
| MT 2 CENTER | 17.78 | 20.00 | 112.00 | 48.00 | 15.50 | M22x1.5P |
| MT 3 CENTER | 23.825 | 24.00 | 138.00 | 57.00 | 17.50 | M27x1.5P |