FLOATING REAMER HOLDER

FEATURES:

- This is a short length Floating Reamer Holder with radial parallel float of 1.0 mm.
- This has got a special mechanism of weight balancing ; at the end.
- This Reamer Holder is with (ER 25A collet chuck)
  Capacity 2.0 to 16.0 mm.
- This can be used on any CNC Lathe ; This is available with cylindrical shank Dia 20, 25 & 32mm as per DIN 1835 B+E. (VDI spl mounting on request)
- This solves almost all Reaming problems such as; over size cutting; bell-mouth; surface finish.
- So it is best for correct size with repeatability; with very good Surface finish.

FLOATING REAMER HOLDER (FRH)

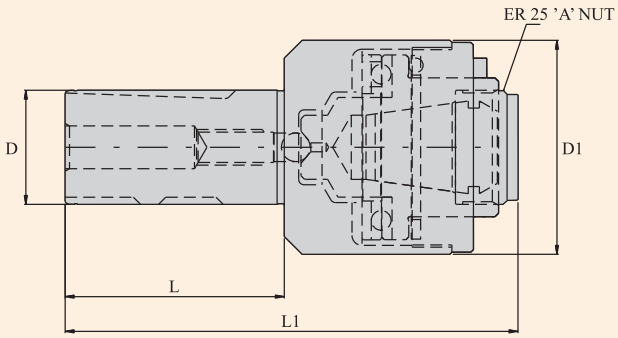

CAPACITY = FROM 2.0MM TO 16.0MM

FLOAT RADIAL PARALLEL = 1.0MM

COLLETS REQUIRED ER 25

Item Name	D	L	D1	L1
DIA. 20 FRH X ER 25A	20.0	51.0	60.0	116.0
DIA. 25 FRH X ER 25A	25.0	56.0	60.0	121.0
DIA. 32 FRH X ER 25A	32.0	61.0	60.0	126.0
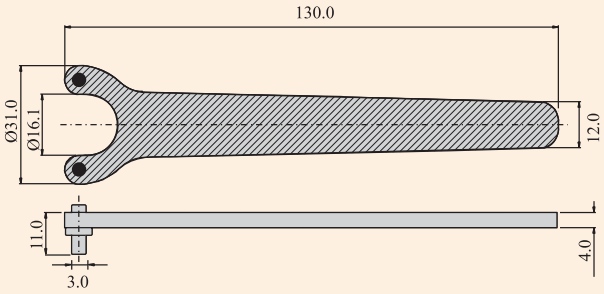
ER25 A-TYPE NUT SPANNER